CIP LIGHTING

LED POST TOP LIGHT

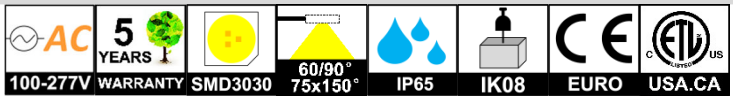

INTRODUCTION

FEATURE
- Modern Post Top Area Lighting
- Upgrade Module LED Lighting Design
- Easy Installation and Maintenance
- Non-glare Uniform Light Distribution
- Color Rendering Index ＞80
- Long Lifespan ＞50,000hours
- Working Temperature: -30℃~50℃

MAIN MATERIAL
- LED Brand: CREE
- Internal Driver Brand: GUBO
- Housing: Die-casted Aluminum
- Optics: High Efficiency Glass Lens

INSTALLATION
- Installation: Post-Top Mount
- Mounting: Φ76mm Post
- Suitable for Road Light, like Street, Park……

STANDARD
- Designed and Manufactured to Comply with CE/RoHS/CB/cETL/SAA Standard
- IP65 Protection, Class Ⅰ Electric

OPTION
- LED CCT: 1700K/2200K/2700K/3500K/5000K
- LED Brand: CREE, BRIDGELUX
- [POST]: Height 1M/1.2M/2.2M/3.5M/4.5M
- Custom Housing Color Finish: (Any Colors in RAL)

BLACK [HBK]	GOLD [HGD]	GRANITE [HGT]	BROWN [HBR]

DIMENSION: 【UNIT: MM】

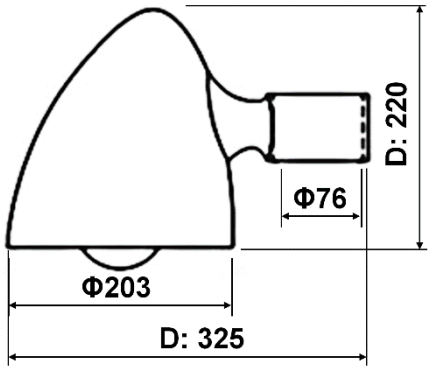

CASE STUDY: POST

MODEL	POWER 【W】	LED TYPE	CCT 【K】	FLUX 【LM】	POWER FACTOR	BEAM ANGLE	OPTIOINAL DIMMING	INPUT 【V】
GTE2121D-35W-WW22	35W	45x1.5W SMD3030	2200K	2620	＞0.9	BLP:(P15°): T3M: V75xH150° BLR: T5S: 60° T5M: 90° T5L: 120°	0/1-10V&TRIAC DMX512&DALI IR&RF&WIFI CCA&ZIGBEE	AC100~277V 50/60Hz [DC36V]
GTE2121D-35W-WW27			2700K	3080				
GTE2121D-35W-WW30			3000K	3170				
GTE2121D-35W-NW35			3500K	3260				
GTE2121D-35W-NW40			4000K	3430				
GTE2121D-35W-PW50			5000K	3430				
GTE2121D-35W-CW57			5700K	3430				
GTE2121D-35W-CW65			6500K	3430				
GTE2121D22-36W-TW	2C@36W	36TW	WW27 CW65	2880	＞0.8			
GTE2121D32-36W-RGB	3C@36W	18RGB	R G B	1800	＞0.6			
GTE2121D42-36W-RGBW	4C@36W	18RGBW	R G B W	2520	＞0.7			
GTE2121D42-36W-RGBA	4C@36W	18RGBA	R G B A	2160	＞0.7			

NOTE:

All parameters are measured at 25℃ ambient temperature, 35% humidity experimental environment.
Tolerances of power and luminous flux are ±10%, tolerance of color rendering index is ±5.

Charlotte International Partners Inc. A.: 1740 First Baxter Crossing, Fort Mill SC 29708
T.: (803) 396.1439 W.: www.ciplighting.com E: info@ciplighting.com