PROJECT_____
FIXTURE TYPE_____

PRODUCT SPECIFICATION SHEET

CIP CS -7 series S101-MB2F / Patented

CIP CS-7 series S101-MB2F Visual Comfort

- A New Benchmark in Visual Comfort - Performance with Aesthetics
- Taking Control of Light
- Form design freedom
- Control no compromise
- Mainstream Value
- Energy Efficiency
- Smart City management

The Breakthrough You've Been Waiting For

CIP CS-7 series presents a new paradigm that takes urban street lighting mainstream to a new benchmark in Visual Comfort. It's a groundbreaking creation that delivers unparalleled design freedom, maximum energy efficiency and unrivaled optical and brightness control. In addition to the striking form of seamless construction, CIP CS-7 series blends high performance optics, controls, scalability and mounting options to cover more applications and enhance the environment they occupy.

CIP CS-7 series area and site luminaire is an innovative solution that delivers an excellent combination of performance and visual comfort. It brings architectural style to area/site and pedestrian scale applications. Its dayform appearance brings a desired organic look into the urban environment, and the LED Optics provide a uniform pixelation free image, managing glare while providing high levels of visibility. This approach results in a high level of uniformity and vertical footcandles that enhances safety in the application environment

The highly efficient range of the CS-7 series delivers excellent lighting levels whilst also providing the right ambiance for all urban application areas, from the outskirts of the city right through to the city center. By evolving the modularity of the CIP CS-7 family and adding new innovations, CIP has made CS-7 the ideal toolbox for every urban context. The design is flatter, completely round and streamlined, the transitions with the spigot and arm entirely flush, thereby giving your cityscape a coherent, elegant and discreet identity

All housing components of the CS-7 series are constructed with die-cast aluminum for superior durability. One piece silicone gaskets enable an IP66 rated optical compartment and assure optical integrity over time. Stainless steel hardware is used to properly secure all components within the housing. CIP CS-7 series maintains a 3G vibration rating.

Exceptional performance and uniformity with diffuse lens configurations offers a high degree of comfort by limiting glare and brightness. Outputs range from 3,000lm to 7500lm.
The CS-7 series provides a unique, scalable lighting solution targeted for 2.5m(8ft) to 6.0m(20ft) mounting heights. Its design brings proportion to parking lots, drive lanes, entrances, building perimeters and pathways.

Charlotte International Partners Inc.
1740 First Baxter Crossing
Fort Mill, SC 29708 USA

LED'S GO GREEN!

Features

The CIP CS-7 series is designed to the highest standards of excellence and quality with attention focused on the finest details to aid installation and maintenance

- High visual comfort
- High performance optics and uniform light distribution
- Hidden hinge allows access to the electrical components without compromising the exterior design
- Speed Mount aids pole
- Body designed to prevent fitting from water、dust、and bird droppings etc.,
- Self-cleaning and Tool free entry
- Dynamic thermal regulation protects LEDs and electronics under extreme temperatures
- Replaceable driver unit and control gear
- 0-10V & 1-10V dimmable、DALI Control gear、Timing dimmable、Zigbee for Smart City management
- Photo sensor control 3P 5P 7P NEMA Socket & Twist-lock Receptacle
- Microwave Motion Sensor with Tri-level & 3-step dimming
- Common mode surge protection 6KV and Customized achievable up to 10KA and 20KA for option
- Die-cast aluminum optical assembly, lid, body and arms, thickness 4mm

Benefits

- City visual comfortable
- An integrated Urban Styling lighting toolbox designed for many different urban applications
- Lower energy consumption by up to 80%, with a corresponding reduction in CO_2 emissions
- Less and Easier maintenance
- Future-proof
- Smart & Intelligent lighting control comes true
- City-attractive, welcoming, convenient and safe

Applications

City centers, Commercial districts, Parks and Plazas, Urban landscape, Urban green belt, Rural road, Riverside, Lakeside, Residential areas, Pathway etc.,

Charlotte International Partners Inc.
1740 First Baxter Crossing
Fort Mill, SC 29708 USA

LED'S GO GREEN!

Dimension drawings

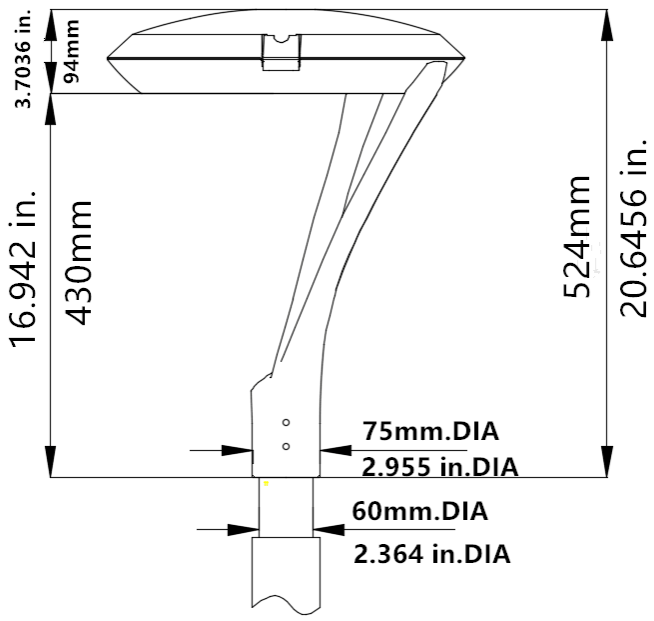

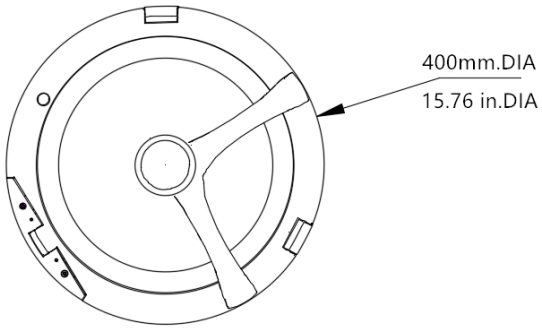

Construction & Housing

- IP66 Rated housing is cast from corrosion resistant aluminum, maintaining strength and precision to sustain long term dayform appearance
- Aluminum alloy die-casting is designed as one-piece with internal cooling fins
- Stable mechanical system prevents damage from installation generated vibration
- External hardware and casting seams are minimized to enhance appearance
- Molded silicone gasket throughout insures the sealing and provides ingress protection
- IK10 rated enclosure protects electrical equipment against external mechanical impacts
- Body designed to prevent fitting from water、dust、and bird droppings etc.,
- Self-cleaning

Finish

- Utilizes premium ultra-weatherable TGIC based polyester powder coatings to withstand extended outdoor exposure, providing excellent resistance to corrosion, ultraviolet degradation and abrasion
- Exceptional E-Coat epoxy primer with an ultra-durable powder topcoat, electrostatically applied, thermally cured are provided for seaside application as customized requirements
- Good film appearance combined with excellent mechanical and exterior exposure qualities display greater than twice as much gloss retention
- Finish is compliant with Max 3000hr salt spray
- Standard color includes Dark Bronze, Black and Light Gray. RAL & Customized color available with MOQ 100pcs

Optics

- Specifically designed for pedestrian applications
- Optical PMMA LGP plus high-degree diffusion outdoor PC lens produces symmetric 80° beam light distribution The LGP is manufactured from precision injection molded PMMA resulting in a pixelation free optical image for improved glare control and visual comfort

Light Performance

- High Visual comfortable and Glare Free. SDCM<3
- High performance optics and uniform light distribution
- Luminaire output efficacy up to 125 LPW. Minimum CRI 70 offered as standard. 80&90 CRI offered as customized
- CCT 2700-3000K, 3700-4000K, 4700-5000K, 5400-5700K offered as standard
- BUG Rating: B2-U0-G1
- EPA (Effective Projected Area): 0.69 (Sq. Ft.)

Electrical

- LED driver & electric parts are directly mounted to upper housing thermal pad for optimal thermal performance
- Input voltage 100-277Vac 50/60Hz, and 347-480Vac 60Hz only for 61.5W version
- PF>0.92 at full load. THD<10% at full load.
- Integral 6KV surge protection offered as standard (DALI version 10KV). 10KA 20KA SPD offered as customized
- Open circuit fault will turn off the luminaire to protect the sensitive electronics and as a signal for maintenance
- Replaceable driver unit and control gear
- Powered off automatically when opening the fixture

Dimming and Controls

- 0-10V & 1-10V dimmable, dimming range from 10% to 100% through the use of the standard 0-10V interface
- DALI Control gear dim-to-off
- Timer dimmable with 3 timer modes
- 3P NEMA Socket & Twist-lock Receptacle with Photo sensor control--on/off
- 5P NEMA Socket & Twist-lock Receptacle with Photo sensor control--tri-level dimming
- 7P NEMA Socket & Twist-lock Receptacle with Photo sensor control--DALI control
- 7P NEMA Socket & Twist-lock Receptacle with Zigbee control gear—wireless communication
- Integrated Microwave Motion sensor--on/off
- Detached dimming and occupancy Microwave Motion sensor--tri-level dimming
- Intelligent & Smart City management compatible and flexible

Mountings

- 76mm (3.0'') Post-top mount for 60mm (2-3/8'') OD Tenon; 40mm (1-3/5'') & 50mm (2.0'') OD Tenon customized
- 102mm (4.0'') Post-top mount for 60mm (2-3/8'') OD Tenon; 50mm (2.0'') O.D. Tenon as customized
- Flush mount 60mm (2-3/8'') O.D. Pole; 40mm (1-3/5'') & 50mm (2.0'') O.D. Pole as customized
- Secured via six sets of concealed stainless steel screws

Installations and Maintenance

- Suggested installation height 2.5m(8ft) to 6.0m(20ft)
- Tool-less opening and Easy maintenance on-site
- All external screws are in AISI 304 stainless steel. Screw connection block or as option an external IP connector
- 0.5m outlet Input cable offered as standard and customized cable length is acceptable
- Body designed to prevent fitting from water、dust、and bird droppings etc.,
- Self-cleaning

Ratings

- IP66 Rated
- IK10 Rated
- CE-EMC CE-LVD SAA C-tick IEC ETL and DLC Listed
- Complies with the materials of RoHS
- Operating temperature rated at -40C° to 45C°

Lumens maintenance and Warranty

- Projected L90B10>50,000 hours at Ta=25C°
- Projected LED failure rate 0.1% ≤ 50,000 hours
- Projected Driver failure rate ≤ 0.1% per 10,000 hours
- 5 Years warranty and 7 Years warranty is availability as customized requests

CAUTION

Fixtures must be grounded in accordance with national, state and/or local electrical codes. Failure to do so may result in serious personal injury

Close Review

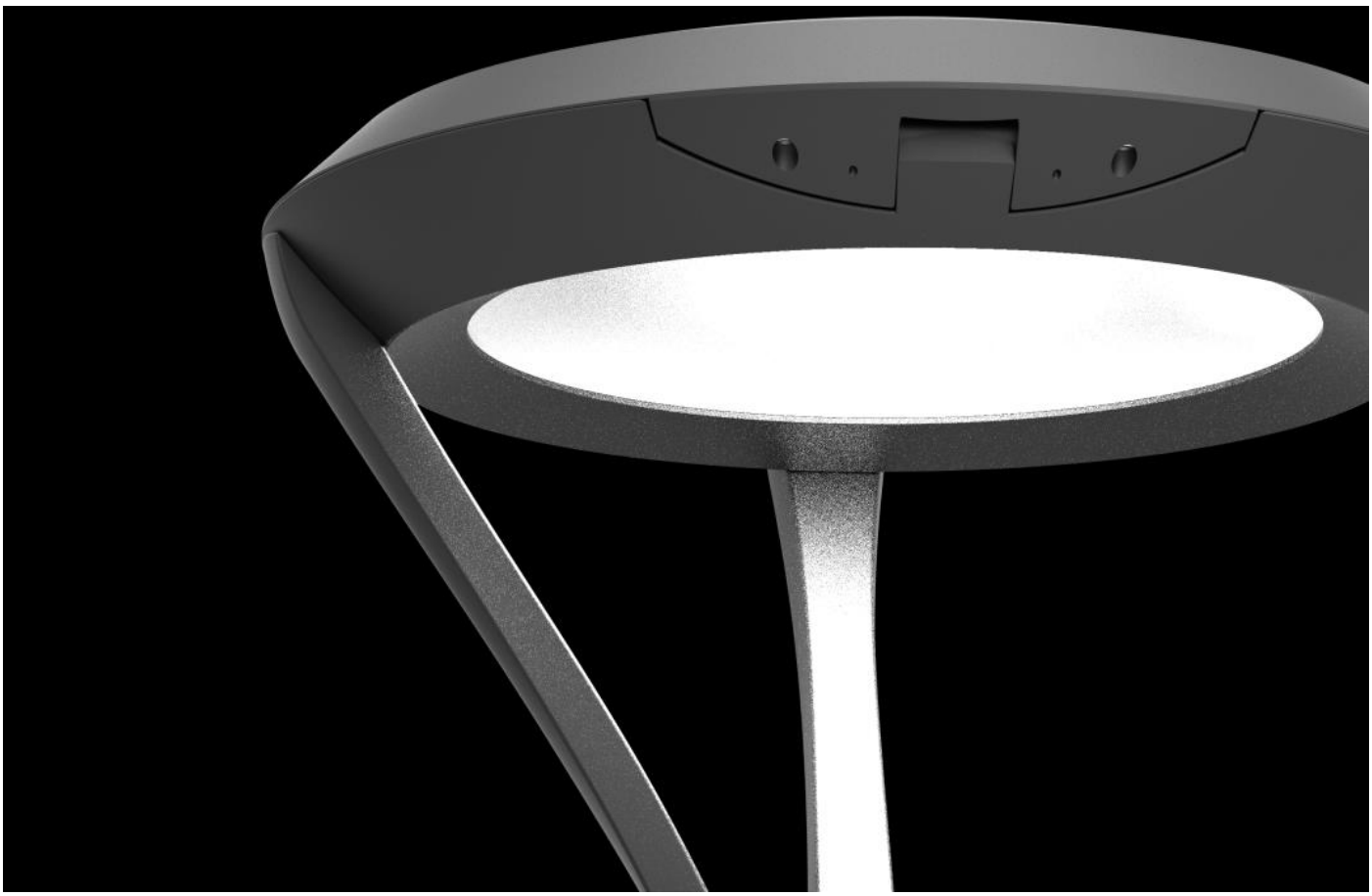

Application

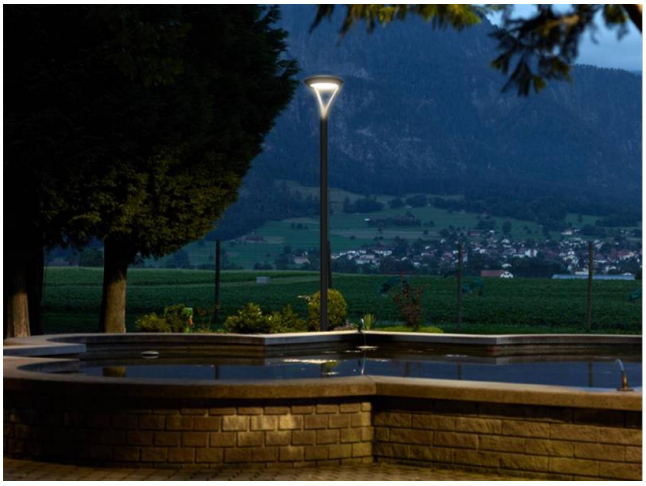

Lighting review

Specification details

Product name: CIP CS-7 series Post-top MB2F

Series No.: CIP-EW-S101MB2F-Axxx. **"A" means Non-dimmable**; "xxx" means wattage

Model No.	Input wattage	LPW	Certification			
CIP-EW-S101MB2F-A025	24.0W	120-125	CE IEC SAA C-tick ETL			
CIP-EW-S101MB2F-A035	35.0W	120-125	CE IEC SAA C-tick ETL DLC			
CIP-EW-S101MB2F-A060	58.0W	120-125	CE IEC SAA C-tick ETL DLC			

Notes 1: DLC for Model 24.0W will be available soon.

Series No.: CIP-EW-S101MB2F-Bxxx. **"B" means 1-10V & 0-10V dimmable;** "xxx" means wattage

Model No.	Input wattage	LPW	Certification			
CIP-EW-S101MB2F-B025	24.0W	120-125	CE IEC SAA C-tick ETL			
CIP-EW-S101MB2F-B035	35.0W	120-125	CE IEC SAA C-tick ETL DLC			
CIP-EW-S101MB2F-B060	58.0W	120-125	CE IEC SAA C-tick ETL DLC			

Notes 1: DLC for Model 24.0W will be available soon

Notes 2: 1-10V & 0-10V can NOT be dim-to-off

Series No.: CIP-EW-S101MB2F-Cxxx. **"C" means Timer dimmable with 3 timer modes;** "xxx" means wattage

Model No.	Input wattage	LPW	Certification			
CIP-EW-S101MB2F-C025	24.0W	120-125	CE IEC SAA C-tick ETL			
CIP-EW-S101MB2F-C035	35.0W	120-125	CE IEC SAA C-tick ETL DLC			
CIP-EW-S101MB2F-C060	58.0W	120-125	CE IEC SAA C-tick ETL DLC			

Notes 1: DLC for Model 24.0W will be available soon

Notes 2: Regular timing curve setting by manufacturer is: 50% as start---1 hour later 100%---5 hours later 50%---2 hours later 30%---4 hours later 100%---1 hour later 30%. Kindly advise if you have special request before ordering

Notes 3: MOQ 50pcs

Series No.: CIP-EW-S101MB2F-Dxxx. **"D" means DALI control European standard 220-240Vac;** "xxx" means wattage

Model No.	Input wattage	LPW	Certification			
CIP-EW-S101MB2F-D030	27.0W	120-125	CE IEC SAA C-tick			
CIP-EW-S101MB2F-D040	38.5W	120-125	CE IEC SAA C-tick			
CIP-EW-S101MB2F-D060	61.5W	120-125	CE IEC SAA C-tick			

Notes 1: Dim-to-off

Notes 2: Surge protection 10kV

Notes 3: Suitable for Insulation Class II luminaire

Notes 4: Complies with Zhaga Interface Specification Book 13
Notes 5: 220-240Vac Input only
Notes 6: MOQ 50pcs

Series No.: CIP-EW-S101MB2F-Exxx. **"E" means DALI control North American standard 100-277V**; "xxx" means wattage

Model No.	Input wattage	LPW	Certification			
CIP-EW-S101MB2F-E030	27.0W	120-125	ETL			
CIP-EW-S101MB2F-E040	38.5W	120-125	ETL			
CIP-EW-S101MB2F-E060	61.5W	120-125	ETL			

Notes 1: Philips Advance Xitanium SimpleSet Wireless Full Programmable driver DALI dimming
Notes 2: DLC will be available soon
Notes 3: MOQ: 100pcs

Series No.: CIP-EW-S101MB2F-Fxxx. **"F" means Photoelectric control with NEMA socket;** "xxx" means wattage

Model No.	Input wattage	LPW	Certification			
CIP-EW-S101MB2F-F025-3P	24.0W	120-125	CE IEC SAA C-tick ETL			
CIP-EW-S101MB2F-F025-5P	24.0W	120-125	CE IEC SAA C-tick ETL			
CIP-EW-S101MB2F-F030-7P	27.0W	120-125	CE IEC SAA C-tick			
CIP-EW-S101MB2F-F035-3P	35.0W	120-125	CE IEC SAA C-tick ETL DLC			
CIP-EW-S101MB2F-F035-5P	35.0W	120-125	CE IEC SAA C-tick ETL DLC			
CIP-EW-S101MB2F-F040-7P	38.5W	120-125	CE IEC SAA C-tick			
CIP-EW-S101MB2F-F060-3P	58.0W	120-125	CE IEC SAA C-tick ETL DLC			
CIP-EW-S101MB2F-F060-5P	58.0W	120-125	CE IEC SAA C-tick ETL DLC			
CIP-EW-S101MB2F-F060-7P	61.5W	120-125	CE IEC SAA C-tick			

Notes 1: 3P means 3pin NEMA Socket & Twist-lock receptacle with Photoelectric control & on and off function
Notes 2: 5P means 5pin NEMA Socket & Twist-lock receptacle with Photoelectric control & tri-level dimming
Notes 3: 7P means 7pin NEMA Socket & Twist-lock receptacle with Photoelectric control & DALI control
Notes 4: DLC for Model 24.0W will be available soon
Notes 5: 220-240Vac Input only for 7P NEMA Socket & Twist-lock receptacle & DALI control
Notes 6: MOQ 50pcs for 7P NEMA Socket & Twist-lock receptacle & DALI control

Series No.: CIP-EW-S101MB2F-Gxxx. "G" means Photoelectric control with 7P NEMA Socket and DALI control North American standard 100-277Vac; "xxx" means wattage

Model No.	Input wattage	LPW	Certification			
CIP-EW-S101MB2F-G030-7P	27.0W	120-125	ETL			
CIP-EW-S101MB2F-G040-7P	38.5W	120-125	ETL			
CIP-EW-S101MB2F-G060-7P	61.5W	120-125	ETL			

Notes 1: DLC will be available soon
Notes 2: Philips Advance Xitanium SimpleSet Wireless Full Programmable driver DALI dimming
Notes 3: MOQ: 100pcs

Accessories

3Pin NEMA Socket & Twist-lock receptacle USD$9.0
5Pin NEMA Socket & Twist-lock receptacle USD$21.0 Must work with 1-10V&0-10V dimmable driver
7Pin NEMA Socket & Twist-lock receptacle USD$24 Must work with 1-10V&0-10V dimmable or DALI driver
Shorting cap USD$9.0

Series No.: **CIP-EW-S101MB2F-Hxxx.** "H" means 347-480Vac Input 60W 0-10V dim only; "xxx" means wattage

Model No.	Input wattage	LPW	Certification			
CIP-EW-S101MB2F-H060	61.5W	120-125	ETL			

Notes 1: DLC will be available soon
Notes 2: Philips Advance Xitanium driver
Notes 3: MOQ: 100pcs

Series No.: CIP-EW-S101MB2F-Ixxx. "I" means Microwave motion sensor with tri-level dimming; "xxx" means wattage

Model No.	Input wattage	LPW	Certification			
CIP-EW-S101MB2F-I025	24.0W	120-125	CE IEC SAA C-tick ETL			
CIP-EW-S101MB2F-I035	35.0W	120-125	CE IEC SAA C-tick ETL DLC			
CIP-EW-S101MB2F-I060	58.0W	120-125	CE IEC SAA C-tick ETL DLC			

Notes 1: Tri-level diming control based upon occupancy (also known as corridor function)

Notes 2: 24-hour daylight monitoring dawn / dusk sensor

Notes 3: Sensor and control device are built in the luminaire

Notes 4: Max mounting height 8m. >8m height installation contact manufacturer for availability

Notes

1. 60mm Pole installation offered as standard. 50mm Pole installation Extra USD$11.00 and USD$5.0 for 40mm Pole
2. Customized color & RAL is available with MOQ 100pcs
3. 10KA Surge protection Extra USD$4.5. 20KA Surge protection Extra USD$18.0
4. Minimum CRI80 and Minimum CRI90 available upon request with MOQ 50pcs
5. IP67 connector for wiring if needed Extra USD$5.00 per unit
6. Customized input cable length available
7. Package or Logistic data please refer to our Product Specification sheet or contact our sales team

Charlotte International Partners Inc.
1740 First Baxter Crossing
Fort Mill, SC 29708 USA

LED'S GO GREEN!